Intelligent Energy Europe

□ D 3.1 – CRES

nirsepes

New Integrated Renovation Strategy to Improve Energy Performance of Social Housing

ΚΑΠΕ
CRES

Technical guide for Retrofitting Social Housing

CENER
CRES

INTEGRATED STRATEGY

D 6.1 Strategies Guide

↑ ↑ ↑

ANALYSIS	GUIDES		INFORMATION; QUALIFICATION		
D 2.1 Social Housing **D 2.2** Case Studies	**D 3.1** Technical Guide	**D 5.1** Financial Guide	**D 4.1** Forums	**D 6.2** Retrofitting Plans	**D 7.2** Diffusion Materials **D 7.3** Training Courses

Introduction

Our society has become increasingly dependent on fossil fuels such as oil, coal and natural gas. These are finite resources, having been created by natural processes over millions of years. Burning them to produce energy results in emissions of "greenhouse gases", including carbon dioxide (CO_2). These gases trap solar radiation in the earth's atmosphere and cause undesirable changes in the climate.

Home energy use is responsible for over one quarter of all Europe CO_2 emissions. Improving the energy efficiency of these existing dwellings will play an important part in achieving the Europe CO_2 emission targets.

Energy efficiency in housing is defined as the minimisation of the energy cost necessary to provide the specified internal environment, subject to the criterion of cost-effectiveness used by the client. The internal environment can be specified in terms of temperatures, moisture levels, ventilation, hot water, lighting and appliance requirements.

Following refurbishment, all housing should be as energy efficient as cost-effectiveness allows, in order to:

- reduce occupants and owners fuel bills and provide affordable warmth and cooling
- minimise management and maintenance costs
- increase property value (and rent revenue)
- reduce global and local pollution
- conserve fossil fuel resources.

Social housing in Europe presents a significant potential for energy saving, while simultaneously improving indoor living conditions. This is very significant in the case of providing the underprivileged the opportunity to live better, save money, and in the case of single property ownership, to increase the value of a dwelling. Initial retrofitting costs, in case of single ownership should be considered in accordance to available financing policies and options in each country. Social housing companies or cooperatives have significant benefits by applying overall retrofitting measures and may compensate costs by increasing property value and respective selling or rental prices, which can also be affordable for tenants. This guide aims at providing general guidelines to either single flat or building owners with the technical options for energy retrofitting, which, according to local climate, local practices and available technologies, energy tariffs and available economic resources, which combined will lead to tailored sets of measures. These technological solutions may be classified according to the degree of intervention required, the amount of available financial resources, and technical priorities. Measures include overall building envelope insulation and solar protection, renovation of old heating systems, integration of renewable energy sources for covering various energy needs.

It is impossible to prescribe a single package of measures that would be applicable to all existing dwellings. The most suitable and cost-effective measures depend, to a large degree, on the opportunities arising from the proposed general improvements and the form of construction.

Heat exchanges and energy consumption of buildings

Buildings exchange heat with their environment. They gain heat and they lose heat by radiation, conduction and convection. They also gain heat by the heat sources inside, as are electric appliances and people, who give out heat due to metabolism. Heat gains are favourable in winter, heat losses during the summer. In order to maintain desired thermal conditions inside a building, the net heat losses (total heat losses minus total heat gains) during winter and net heat gains (total heat gains minus total heat losses)during summer should be equalized by heat produced by the heating system or heat removed by the cooling system.

Thus result the heating and cooling requirements of a building, which are, in most cases met by the consumption of conventional fuel or electricity.

In order to increase energy efficiency, we need to reduce the heating and cooling requirements, or improve the efficiency of the heating and cooling system, or substitute heating and cooling by renewable energy sources.

In order to reduce heating and cooling requirements, there are two basic strategies:

a. Winter strategy:
   - ✓ Reduce building heat losses, by improving the energy performance (thermal insulation, U-Value, double glazing) of the building envelope
   - ✓ Increase solar heat gains, by allowing solar penetration through mostly south-facing windows or by the use of passive solar systems
b. Summer strategy:
   - ✓ Increase building heat losses, mostly through ventilation (night ventilation only in very warm days)
   - ✓ Reduce building heat gains by appropriate shading (reduction of solar heat gains) and by limiting internal heat gains produced by electric devices

Designing the buildings' surrounding open spaces (microcliamate design) taking into account the two basic strategies complements any intervention applied on or inside the building, by providing favourable microclimatic conditions for insolation or shading, wind protection or enhancing of breezes, evaporative cooling, etc.

Building energy efficiency (additionally to efficient space heating and cooling) is increased by using renewable energy sources to cover additional building needs, such as domestic hot water, by the utililsation of daylight, and by the use of energy efficient electric equipment.

This guide concerns the retrofitting options proposed for the building envelope and installations. However, energy behaviour is an additional parameter concerning energy efficiency and in the case of housing it is the main aspect of energy management at individual apartment level.

Following refurbishment the building should be, as already stated as energy efficient as cost-effectiveness allows, which means that a certain standard of

reduced energy consumption will be met. The benefit of energy refurbishment, apart from all aforementioned economic and environmental aspects, is the additional quality achieved with respect to thermal conditions inside a building, which is due to the improved overall performance with respect to temperature, air quality, radiant heat flows around the occupants which always reaches a higher standard than in buildings of low energy efficiency.

Using the guide

The guide is aimed at providing building owners, decision-makers and investors (private or public) with the necessary general information required for taking the right steps and selecting appropriate technologies for energy retrofitting of social housing. The basic strategic issues are addressed with respect to several types of energy saving measures and renewable energy sources that may be applied. Local variations, depending on country, local practice, market, legislation and climate are highlighted when appropriate.

This guide is structured in two distinctive parts.

Part I provides an **Overview of Energy Retrofitting Measures.**

It refers to main aspects of energy retrofitting, namely interventions on the building shell, installation of passive and hybrid cooling devices, retrofitting of the building heating system and use of renewable energy technologies for space and water heating as well as electricity production.

The respective chapters are as follows:

1. Energy retrofitting of the building shell
2. Installation of Passive and Hybrid Cooling Devices
3. Energy retrofitting of heating systems
4. Energy efficient hot water & lighting systems and appliances
5. Renewable Energy Systems for heating and cooling
6. Building integrated Photovoltaic systems

Part II provides **Technical Solutions for Energy Retrofitting of the Building Envelope**.

It gives detailed solutions for improving energy efficiency during repair and improvement work of buildings, guidelines on insulating the building envelope, constructing windows and doors with improved thermal characteristics, and guidelines for draught-striping. It also presents case studies of energy retrofitting. The respective chapters are:

1. Construction Characteristics of Social Houses
2. Energy Efficiency Measures
3. Case Studies

GUIDE FOR ENERGY RETROFITTING OF SOCIAL HOUSING

Part I

Overview of Energy Retrofitting Measures

Developed by CRES (Evi Tzanakaki) with some input from CENER (Inés Díaz Regodón)

ΚΑΠΕ
CRES

cener
centro nacional de energías renovables
FUNDACIÓN CENER CIEMAT

PART I: Table of Contents

1. ENERGY RETROFITTING OF THE BUILDING SHELL I.2

1.1 ADDITION OF INSULATION I.2
1.2 REPLACEMENT OF WINDOWS (AND OTHER OPENINGS) I.3
1.3 WIND PROTECTION OF THE ENVELOPE I.3
1.4 INTEGRATION OF PASSIVE SOLAR SYSTEMS I.4
1.5 CREATION OF VENTILATION OPENINGS I.5
1.5 CREATION OF VENTILATION OPENINGS I.6

2. INSTALLATION OF PASSIVE AND HYBRID COOLING DEVICES I.7

2.1 SOLAR PROTECTION AND SHADING SYSTEMS I.7
2.2. CEILING FANS I.8
2.3 SUPPLY-EXHAUST FANS I.8

3 ENERGY RETROFITTING OF THE HEATING SYSTEMS I.9

3.1 HEATING SYSTEMS I.9
3.2 RETROFITTING OF EXISTING COMPONENTS I.9
3.3. INSTALLATION OF NEW HEATING SYSTEM I.11

4. ENERGY EFFICIENT HOT WATER & LIGHTING SYSTEMS AND APPLIANCES I.12

4.1 HOT WATER SYSTEM I.12
4.2 LIGHTING I.12
4.3 DOMESTIC APPLIANCES I.12

5. RENEWABLE ENERGY SYSTEMS FOR HEATING AND COOLING I.13

5.1. SOLAR THERMAL I.13
5.2 GEOTHERMAL HEAT PUMPS I.17
5.3 BIOMASS FOR HEATING I.17

6. BUILDING INTEGRATED PHOTOVOLTAIC SYSTEMS I.18

1. Energy retrofitting of the building shell

1.1 Addition of insulation

Addition of insulation onto existing building structures is a main measure in energy retrofitting. This can be easily done by external insulation of roofs and walls as well floors over pilotis. External insulation can cover most thermal bridges, while leaving an adequate amount of thermal mass (brick walls) uninsulated internally. External insulation has also the advantage of giving a new improved appearance of the building and several options are available in the market for full scale exterior surface retrofitting. Alternatively, insulation may be placed inside the flats in the case of internal retrofitting, but may result in the limitation of the interior building thermal mass, and will cause nuisance to occupants.

Details of insulation methods for all building elements are given in the separate brochure on recommendations for energy retrofitting of the building envelope.

The exact amount of insulation required for wall elements (thickness * thermal conductance) depends mainly on local climate, and element exposure. For example, in Greece common insulating materials or 5cm thick are adequate for most walls, while 5-10 cm will be required for roofs or some north facing walls. In northern climates at least double insulation may be required.

In Greece the addition of insulation on the building roof may reduce the energy demand for heating by 1-7% and for cooling by 2-18%. Addition of wall insulation results in energy conservation of 21-42% for heating and 4-20% for cooling. Insulating the ground floor results in reduction of the heating load by 4-20%.

Pictures of external insulation applied to retrofit buildings

The results of the study "Potencial energy savings and reduction of CO2 emissions in dwellings[1]", made by CENER in Spain area, shows that the increase of the insulation thickness in walls and roofs reduces the heating energy demand 13,7-44,8%, depending on the climatic area.

[1] This study considered the addition of 5 cm in walls and roofs for Spanish warmer areas and the addition of 8 cm in Spanish colder areas, comparing to the new based levels of Código Técnico de la Edificación 2006.

1.2 Replacement of windows (and other openings)

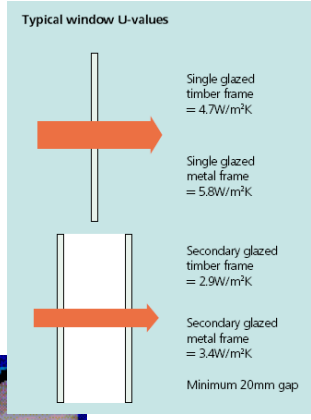

Old single glazed windows may be replaced by new energy efficient windows. In southern countries clear double glazing on insulating frames in generally recommended, although it might not be necessary for south-facing windows in warm areas. In northern countries triple glazing and/or night insulation may be required in some areas. Improved (i.e. low e) may provide further energy savings when applied to northern walls with high exposure to the environment and winds.

It is necessary to have frames of low thermal conductivity. Frames may be wooden, plastic, or aluminium with thermal break should be used.

It is possible to add double glazing on existing frames, however, new frames will limit heat losses due to thermal bridges. Furthermore, attention should be given to the cracks that result in significant heat losses due to air infiltration. If the frames are not replaced, sealing of cracks is essential.

In Greece replacing of windows can result in savings of 5-30%, depending on environmental conditions, window surface and orientation.

Exterior doors may also cause significant heat losses, depending on their material, age, and condition, and when the walls become insulated, doors may act as thermal bridges. A large amount of these losses may be through cracks and sealing is required.

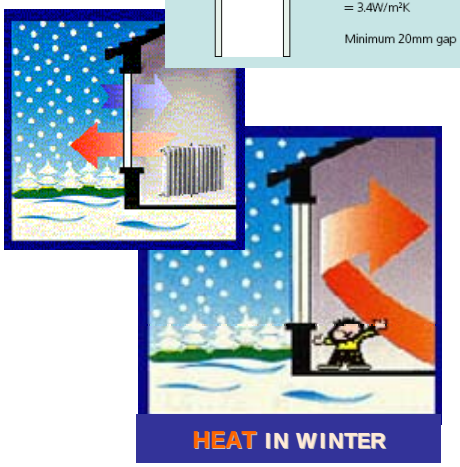

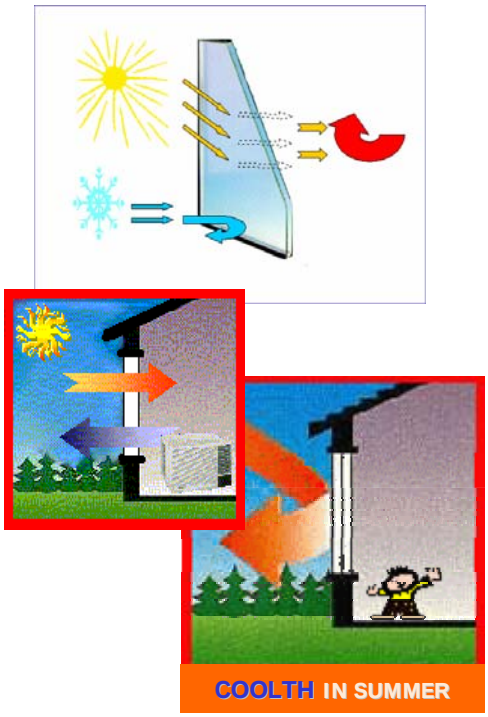

1.3 Wind protection of the envelope

Cold winds, usually from the north, result in significant heat losses. In order to protect the building, the addition of buffer spaces (zones) may be required usually on northern facades, even in southern climates.

On mostly northern windows, additional night insulation of openings may be required. This can be achieved by simple or insulating curtains or blinds.

Wind protection may be also achieve by exterior elements and vegetation.

1.4 Integration of passive solar systems

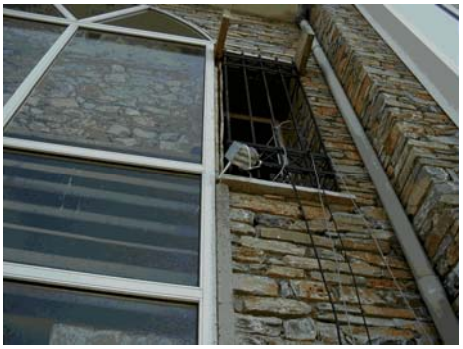

Passive solar systems exploit the greenhouse effect by converting solar energy to heat, and trapping it inside a space. Passive solar systems require south orientation (with a deviation _+30 east or west or even higher, depending on climate).

South-facing windows may be considered as passive solar systems, when properly sized and combined with energy efficient building structure. In some cases, retrofitting may include the increase of number or size of south-facing windows.

The integration of passive solar systems on existing buildings is limited, but may, in certain cases result in energy savings of 15-30% in southern countries, and even higher.

There are two indirect gain passive systems that may be integrated onto building facades. The solar wall and the sunspace.

a. Solar walls

Converting an existing wall to a solar wall may increase solar gains from south-facing facades. This will include the addition of external glazing at a distance about 10-15 cm from the external wall surface, and, depending on the type of wall, creation of vents internal insulation of the wall.

In order to convert an existing wall to a thermal storage solar wall, the wall should have adequate thermal mass (i.e. be made of concrete or bricks). Vents opened will convert the mass wall to a Trombe-Michel wall. An existing wall may be converted to a thermosyphoning air panel by insulating externally and opening vents. The exterior surface of the solar wall should be of dark colour, in order to absorb solar energy.

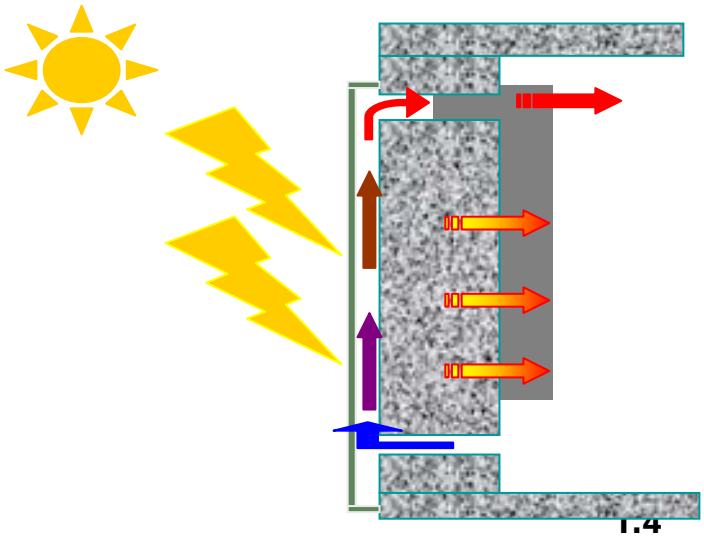

b. Sunspaces

Sunspaces may be added to the south side of existing buildings, if there is the possibility of extending the building floor surface. Sunspaces can reduce heating loads, as long as they are operated as such, not used as main building spaces. Open balconies may be converted to sunspaces, which can provide indirect solar heat gains to adjacent spaces. Sunspaces may also extend to more than one floors. The heat can be transferred through openings (doors or windows) or through vents with dampers. Night insulation may be recommended in order to reduce heat losses.

Depending on climate, provision of summer cooling is achieved by various means. In warm climates, sunspaces require **very good ventilation, even complete removal of glazing and appropriate shading**. The sunspace roofs in warm climates are recommended not to be transparent, as in recommended in cold climates.

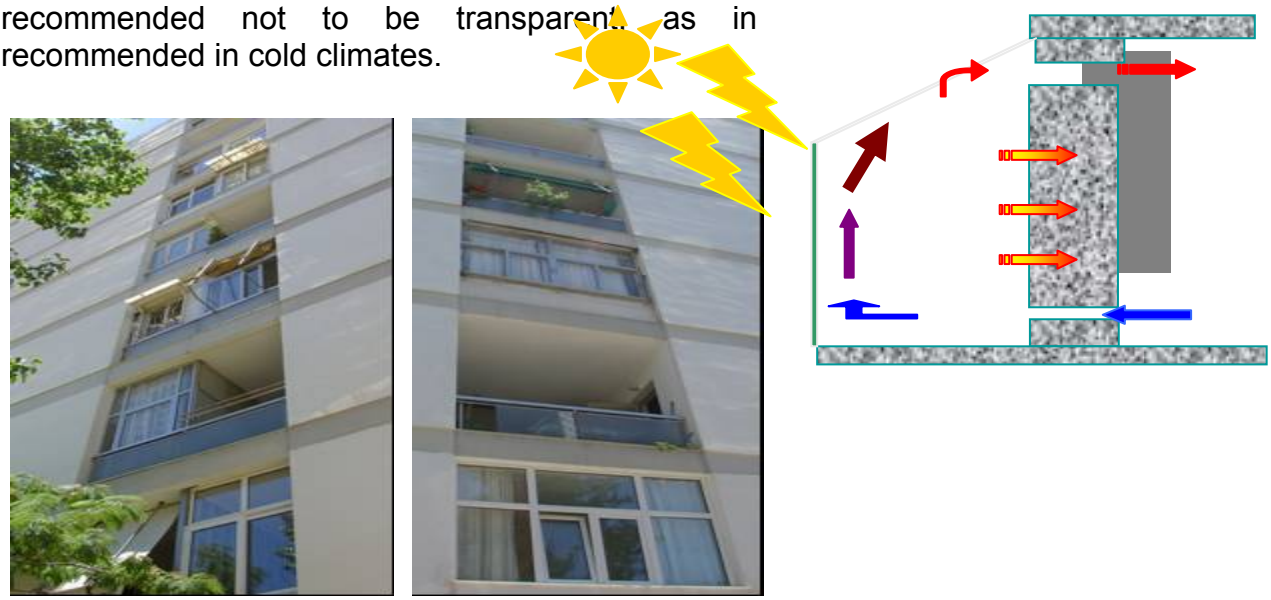

1.5 Creation of ventilation openings

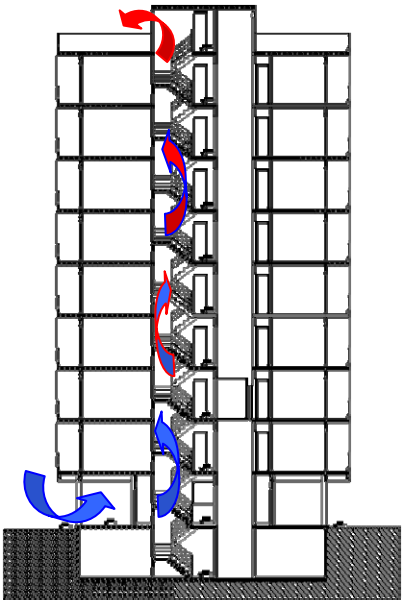

Natural ventilation is a very effective means of reducing summer cooling loads, even eliminating the need for air-conditioning in homes. Ventilation is also required for indoor air quality all year round.

In order to achieve adequate ventilation for cooling a building either by day or, mostly, by night, air flow should be enhanced in, through and out of the building. For cross ventilation openings on opposite sides of the building are required, at the direction of prevailing winds. Exterior obstacles may block or direct the wind inside the building, and should be used accordingly.

Interior flat configuration is also important for allowing the flow of air through the space. Open doors or vents on walls should be utilized. It may be necessary to create ventilation openings, such as vents, windows or skylights on exterior and interior walls of the building, if such are not sufficient.

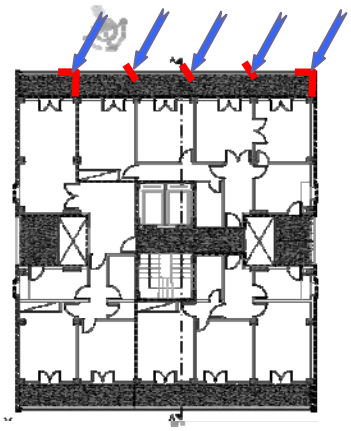

An alternative to cross ventilation is stack-effect ventilation. This is achieved by openings placed on low and high parts of a building. Cool air enters from openings at the bottom of a space or building, is heated, becomes lighter and rises. Openings on the top of a space or building guide this warm air to the exterior, resulting in an increased flow rate. In existing buildings this vertical flow may be achieved by opening the top of stairwells, creation of skylights in conjunction with openings on low parts.

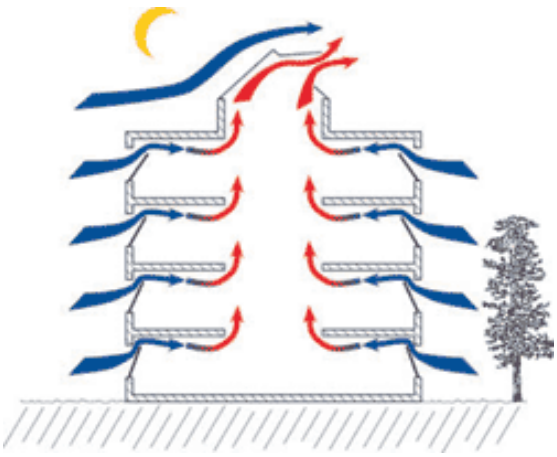

2. Installation of Passive and Hybrid Cooling Devices

2.1 Solar protection and Shading systems

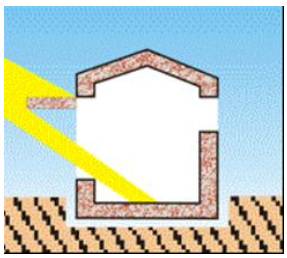

Shading is critical for reducing summer cooling loads. External shading is generally recommended, in order to avoid solar gains entering the building spaces. South orientations require horizontal shading while east and west require vertical shading. North surfaces usually do not require any.

Microclimate and vegetation

Shading may be achieved by appropriate design of the exterior spaces (microclimate design), mostly using trees and vegetation. Deciduous trees in front of windows allow winter solar access, while providing summer shade and evaporative cooling. Evergreen trees may be used also on east and west orientations (winter solar access to these orientations is low). Plants may be used on roofs, walls, pergolas, etc. providing solar and thermal protection.

Exterior surface coatings

Light colours reflect solar radiation and are more appropriate for roofs and walls highly exposed to the summer sun.

Exterior shading systems

External shading systems may be permanent or moveable. Before deciding on what shading system to apply, the shading potential of existing overhangs or fins should be assessed. Generally moveable exterior shading systems should be applied. The most commonly applied are awnings, which are of relatively low cost, compared to external louvers or other blinds, and have the advantage of providing both horizontal and vertical shading. Their operation may be fully manual or electric. Automatic operation of blinds is not recommended for housing.

Interior shading systems

Internal shading is also an option, with a lower energy conservation potential. Combining structural shading with appropriate internal devices (i.e. venetian or vertical louvered blinds) may have satisfactory results, combining solar protection with adequate daylighting and view, rather than just using curtains.

2.2. Ceiling fans

Ceiling fans can increase thermal comfort inside a space, thus reducing or even eliminating the need for air conditioning. Ceiling fans consume very low amounts of energy, and by the wind flow that they create around the human body, remove significant amounts of heat. This produces a feeling of comfort, at temperatures as high as 29-32°C. It has been recorded that in residential buildings well shaded and ventilated during the summer, the use of ceiling fans may be the only mean required for interior thermal comfort, at exterior temperatures as high as 39°C.

2.3 Supply-exhaust fans

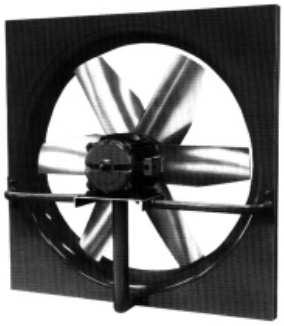

Simple supply and exhaust fans may be applied to buildings where exterior conditions do not allow for adequate natural ventilation. For natural cooling these fans are recommended to operate when exterior temperatures are low, mainly during the night. They should be able to provide at least 5 air changes per hour to the ventilated space.

3 Energy retrofitting of the heating systems

Energy retrofitting of old heating systems is required in order to reduce the final energy and fuel consumption of a building. In order to have an overall efficient retrofitting approach, reducing the building heat load by architectural interventions is a pre-requisite.

Before deciding on the intervention required, an assessment of the existing installations should be made. This will lead to either a series of improvements to the system components, or to a full replacement of the system by a completely new one.

3.1 Heating Systems

There are three main types of heating systems:

- Central heating systems based on boilers and heat emitters
- Individual heating systems based on boilers and heat emitters
- Individual room heaters

An important factor which influences running costs and CO_2 emissions is the fuel type used. In general electricity has the highest CO_2 emissions. Fuels such as gas and oil emit less when combusted.

If a new heating system is required it is therefore worth considering switching to a cheaper and more environmentally friendly fuel. Other factors that influence the running costs and CO_2 emissions are:

- The efficiency of the specific heating system.
- The amount of heat that the system needs to supply to maintain comfortable living temperatures (which will be higher in larger, poorly insulated dwellings).
- The presence of heating controls.
- The occupants' heating requirements and practices.

Boilers are predominantly run on oil, gas, or liquefied petroleum gas (LPG). Some direct-acting electric boilers and solid fuels boilers are available, but these can be more expensive to run and cannot be recommended where other fuel sources are available.

3.2 Retrofitting of existing components

- The old boiler/burner system (older than 15 years old and with efficiency less than 80%) should be replaced by a highly efficient one. This will result in savings around 10%-18%.
- The pipes carrying hot water to the apartments should be insulated (if they are not). This may result in savings up to 10%.
- Temperature controls should be placed. This will result in savings around 10-30%. Temperature controls may be room thermostats and outside weather compensation or Thermostatic Regulating Valves. The type of control will depend on the type of heating system, i.e. if there is autonomy or not.

- A significant amount of energy conservation is achieved by the regular maintenance of the system and the control of its operation.

3.2.1 Boiler replacement

The extra cost of a high efficiency condensing boiler is usually small, therefore is advisable to purchase a high efficiency model.

These condensing boilers:

- Are suitable for a large majority of homes or flats.
- The most efficient type of boiler, with a typical seasonal efficiency of 90 per cent.
- Efficiency remains high even when working at a low level of output, such as only for hot water in summer.

Good savings are achieved when upgrading almost all boilers which are over 15 years old. A new boiler plus the right heating controls can cut fuel bills by 25-35 per cent.

3.2.2 Boiler heating controls

If a boiler is less than 10 years old, it is probably more economical to invest in upgrading its controls.

Heating controls may be upgraded at any time. The most cost-effective time is when the boiler is being replaced or when carrying out other work on the heating system.

A good control package for a boiler system should include:

- A programmer capable of timing the space heating and hot water separately.
- Room and hot water cylinder thermostats.
- Motorised valves to provide independent control of heating and hot water.
- Controls so that the boiler only operates when required.
- Conversion to a fully pumped system where necessary.

<u>Thermostatic radiator valves</u>

- Are fitted on to individual radiators and have a rage of temperature settings.
- Reduce the flow of water to the radiators the thermostats reaches its set temperature.

<u>Room thermostat</u>

- Turns the boiler and heating pump off when the room temperature has reached the required level.
- Normally located in the living room about 1.5m up from floor level.

<u>Programmer or timeswitch</u>

Allows the user to set the periods when heating and hot water are required.

3.2.3 Change of fuel

Alternative fuel options include natural gas, biomass, solar and geothermal energy. The choice depends on the availability of alternative energy sources.

3.3. Installation of new heating system

Choice of system should be made, according to the extent of the refurbishment, availability of other conventional or renewable energy sources, and efficiency of the existing system. Options include:

- New boiler/burner system. Replacing old inefficient system with a new with highly efficient with the addition of double or multi stage burner
- Central heating with radiators with autonomy per flat. Commonly used system with good heating (air) quality and more efficient in comparison to central/vertical distribution systems.
- Floor heating. Best choice in terms for heating quality and energy efficiency for new buildings. For existing buildings needs major refurbishment on the floors.
- District heating. Best when related with CHP plants, central solar systems, biomass boilers or wherever there is available heat (i.e. a big industry)

Individual versus central heating systems

Individual systems offer autonomy to the residents and better efficiency due to low design loads (better performance on partial loads) and less distribution losses.

Central systems offer less installation costs, less (and often) better and cheaper maintenance, competitive efficiencies when installed multi stage burners (partial loads) and utilising controls (e.g. outside weather compensator) and easier to utilise RES (e.g. combi systems). Furthermore, they are safer (independent boiler room away from leaving spaces) and they are aesthetically acceptable (not visible) in contrast to individual systems where they often are installed in balconies and often they need separate chimneys.

4. Energy efficient hot water & lighting systems and appliances

4.1 Hot water system

Hot water consumption can account for a large percentage of total energy use, especially in a modern, well insulated dwelling.

There are several ways in which hot water can be supplied. In many cases it is feasible for most of these systems to be supplemented by solar hot water heating.

Hot water cylinders loose heat over time and require the boiler to fire to maintain a suitable temperature-this uses energy and costs money. Insulating an uninsulated hot water cylinder is a priority measure.

Replacing a defective component such as a leaking hot water cylinder is a good opportunity to specify a high performance hot water cylinder.

In addition to insulating any primary pipework it is also worth considering insulating the secondary pipework, between the cylinder and taps.

4.2 Lighting

In most homes, lighting accounts for 15-20 per cent of the electricity bill.

Low-energy lighting, using compact fluorescent lamps, can be fitted at any time. Low-energy lighting is most cost-effective when fitted in rooms that are most often used.

The availability of dedicated low energy luminaries has improved hugely in recent years with products available for most applications and styles.

4.3 Domestic Appliances

Energy-efficient appliances such as refrigerators and washing machines use less electricity and therefore cost less to run. There is ample evidence that energy-efficient appliances are often no more expensive to buy than equivalent appliances that are much less efficient. When buying an appliance, look for the energy labels.

5. Renewable Energy Systems for heating and cooling

5.1. Solar thermal

Thermosyphoning domestic hot water systems

Thermosiphoning systems are based on the natural flow of water to the solar collector and the tank, which is placed over the collector. The water is heated at the collector, expands and, becoming lighter than the low temperature water of the tank, rises to the storage tank, replacing the cold water which circulated in the system, through a continuous cycle.

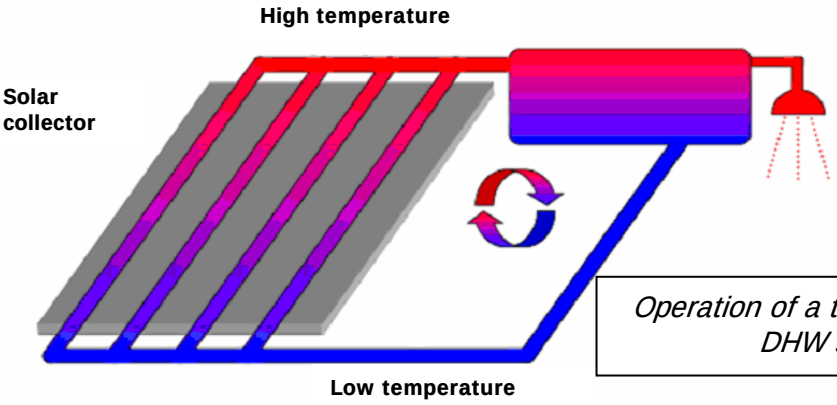

Operation of a thermosyphoning DHW system

In mild climates the location of the tank on building roofs has the advantage of relatively low thermal losses from the hot water to the environment. In cold climates integration of the tank below the roof is more recommended for minimizing heat losses.

A typical solar water heater consists of

- flat solar collectors, facing south, at a slope of 30°-60° to the horizontal
- a hot water storage tank, placed above the solar c
- a piping system
- operation fixtures (security valve, ventilator, etc.).

The most common thermosyphoning system in Greece comprises a collector surface of 2,5m^2 (ranging from 2 to 4m^2) and a 150lt (reaching to about 300lt) tank. Hot water produced is usually 40 – 75^{0}C and the amount of thermal energy produced by such a system yearly is about 1000 kWh.

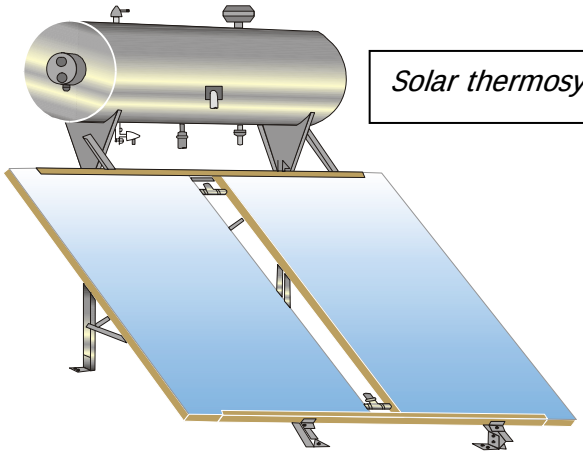

Solar thermosyphoning water heater

Central Solar Systems

Central solar systems comprise an array of solar collectors and a central storage tank from which the hot water is distributed to each apartment through a pipe network. They are applied in apartment buildings, building complexes, and several non-residential buildings.

A typical schematic layout of a central solar system and its main components is given in the following picture.

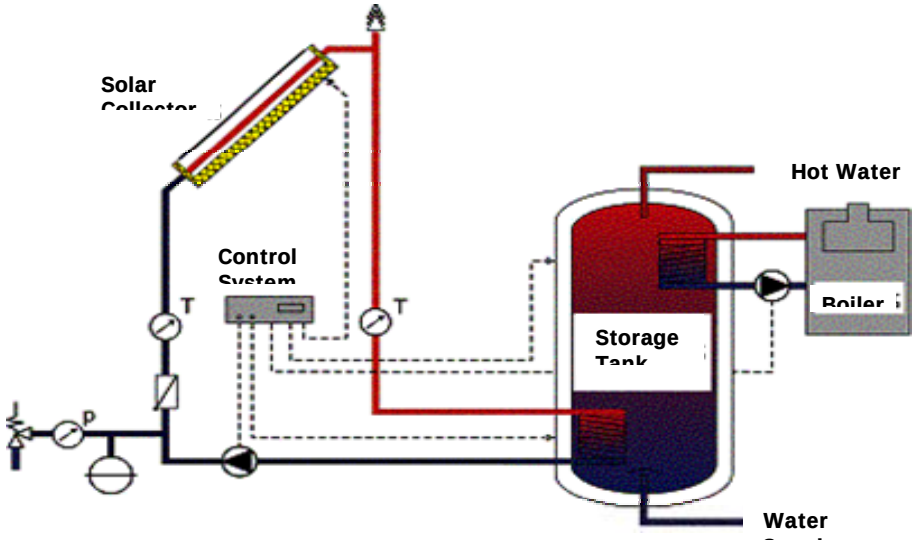

Schematic representation of a central solar system (Source Target/DGS)

The heat collected from the collectors is transferred to a storage tank via a anti-freeze liquid which circulates with the aid of a pump at the collectors' hydraulic system. The heat transfer requires a heat exchanger (a spiral or a plaque) immersed in the storage tank. An auxiliary heat source (boiler) covers the remaining heat loads. The operation is controlled by an electronic control system.

Perfromance data: In the Athens region for 70 lt of daily consumption of DHW of 45 ºC, 1 m^2 of solar collector and 50 lt storage tank will cover 70% of DHW demand.

In Spain, according to the new Technical Building Code, the renovation or the construction of every block of dwellings has to incorporate systems for the collection, storage and use of low temperature solar power adjusted to the overall solar radiation of their location in order to contribute to the demand for hot water in the building. These contributions cover the 30-70% of the demand for domestic hot water.

Central solar systems are classified in two categories, depending on their size. Medium solar systems, with an area of 20-100 m^2 may be applied in apartment buildings, while large solar systems (100-1000 m^2) may be applied in housing complexes.

Technology	€/ m^2	Typical size (m^2)	End user scale	covera ge	kWh/m^2 year for Greek climatic zones (A,B,C) [i]		
"Medium" central solar	350	20-100	Apartment block	60-80%	700	590	485
"Large" central solar	300	100-1000	Housing complex	50-80%	750	680	560

Both types (medium and large) are similar in operation, with few technical differences with respect to collector size and hydraulic fitting, allowing simplification and economy of scale.

Combi" Systems

"Solar combi-systems" resemble a common central solar system. They are used for space heating combined with domestic hot water production.

The following ficugre is an example of the schematics of a combi system.

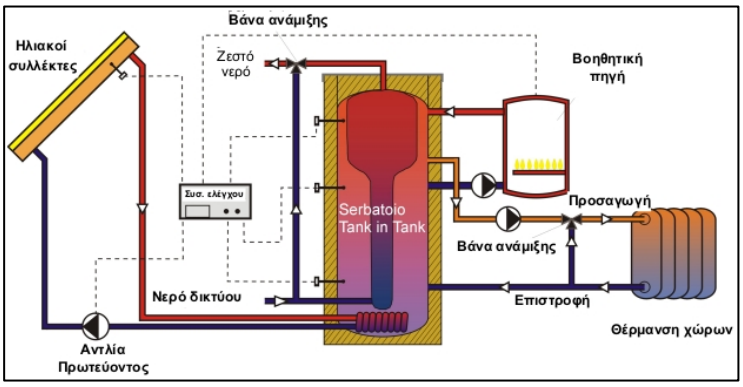

Schematic diagram of combi system (source ITW)

In the typical structure of the above diagram, two storage tanks are applied: the domestic hot water tank in placed within the larger tank, which contains the liquid – water – which circulated in the heating network (radiators).

There are several variations of combi systems. Some do not have a storage tank, but directly heat the building which acts as the "storage tank". Others have the boiler embodied in the storage tank, as shown in the following diagram.

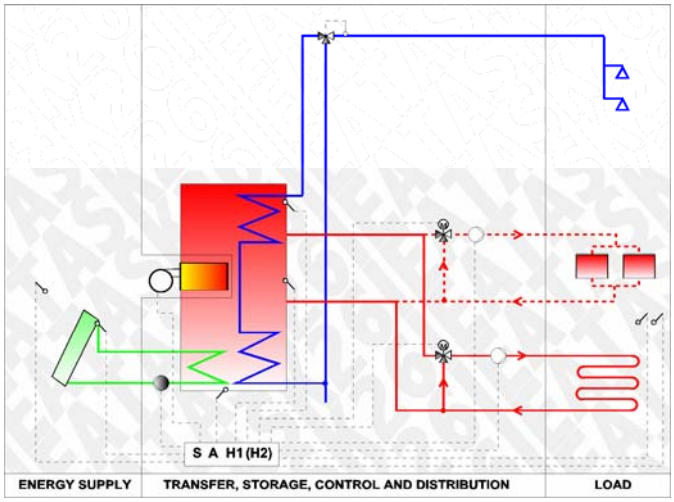

Combi system with integrated boiler at the storage tank (source IEA –task 26)

In Mediterranean countries, that kind of systems can cover the 60-70% of the domestic hot water demand and the 30% of heating demand.

Solar air conditioning system

Solar air conditioning is a rapidly developing technology, which is being applied in buildings with high cooling loads during summertime. Although currently it is not quite economical for housing applications, it may be so in the near future. It is an environmentally friendly technology. A typical absorption cooling system is presented in the following diagram.

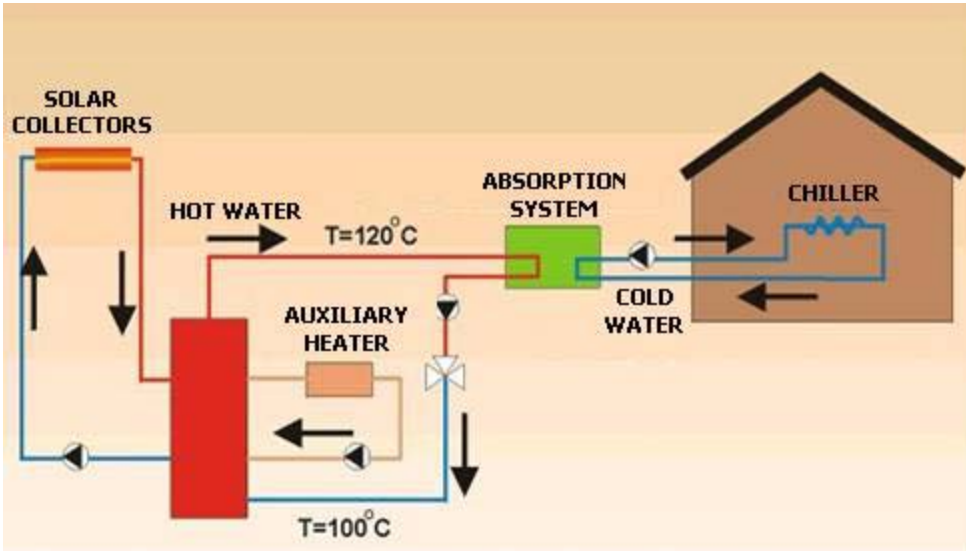

Schematic diagram of a solar air conditioning system

5.2 Geothermal heat pumps

Geothermal heat pumps utilize the earth temperature for providing energy efficient heating and cooling of buildings. Their operation is achieved by combining water-cooled heat pumps and earth-to-air heat exchangers. The exchanger is made of pipes placed in the ground either horizontally, at a depth of about 2 m when there is available surface around the building, or vertically reaching a depth of 80-100 m. The geothermal heat pumps may be dombined with a low temperature heating/cooling system (floor heating/cooling, fan-coils, provision of air through ducts, etc.) or with a central heating system. Geothermal heating/cooling systems consume up to 30% lsess electric energy than standard efficient air conditioning systems.

5.3 Biomass for heating

Biomass in the housing sector is used as a fuel for space heating and domestic hot water. The fuel used may be raw such as wood, kernel wood, etc. or treated for easy use, storage and transfer, such as brikettes, or pellets. They can be used in common fireplaces (20-30% efficency), energy fireplaces and stoves heating several spaces or water (80-85% efficiency), wood or pellet stoves (90% efficiency) and central heating wood or pellet burner (70-90% efficiency).

6. Building integrated photovoltaic systems

Photovoltaics in buildings may be applied for producing electricity, which is delivered either directly to the building when the system is autonomous, or to the grid in the case where the building is connected to the electricity grid, such as in the case of social housing. PV arrays are made of PV panels which are electrically connected to each other. The output of a PV array is connected via appropriate inverters to the electricity grid. The electric energy produced by the PV system is used for covering part of the building electricity demand, while the remaining loads are covered by the electricity network. Thus the owner benefits from the reduced network electricity consumption. In periods where the PV production is higher than the electricity load of the building, the surplus energy may be sold to the network at a fixed price. For the connection of PV arrays with the electricity network inverters converting the direct current produced by PVs to alternate current. The advanced technology of inverters allows the production of electric power output of high quality, while for network security reasons their operation is stopped in the case where the network supply is cut off.

PVs are a high cost technology, thus the cost effectiveness of this investment depends on the tariffs and the price given for PV production in each country. In Greece and Spain, for example, the price for selling grid-connected electricity produced by PVs smaller than 100 kWp with is 0,45 euros/kWh for Greece and 0,44/kWh for Spain, while the purchace price is about 0,1 euros/kWh. The PV system requires an inverter which have a power of 80-90% of the total installed PV capacity.

In order for a PV system to operate efficiently south orientation is required, with a small deviation and the panels are best placed at an angle depending on geographic location (in Greece 30% to the horizontal is recommended). The main applications of PV in buildings are covering all or part of the building roof, integrated on glazed building facades (i.e. curtain walls), or used on weather protection devices such as overhangs or shading devices.

Exact orientation for maximum performance in not always possible in existing buildings, as the existing building surfaces provide a restriction to this. As a result of this the maximum exploitation of solar radiation is not always possible. Nevertheless, the losses from the deviation from the best orientation may not be so important, as are the benefits from the use of panels in substitution of other building elements. What is of importance is the exclusion of shading produced by neighbouring buildings or objects from the surface of PV panels, mainly during the hours of intense solar radiation, because even a minor shading of the PV panels may result in an important reduction of the

produced electric power. In the case where solar radiation does not reach evenly all the PV panels, the connection of PV panels in small arrays of even insolation is recommended. In an array of non homogenous insolation or in the case of partial shading, the efficiency of the whole array is defined by the efficiency of the panel with the lowest performance.

For the installation of PV frames on existing structures ordinary panels with aluminium frames may be used. In this case an additional intermediary structure is required where the PV panels will be placed. For PV applications in new buildings, 'laminate' type panels without the frame which allow their integration as structural surfaces of the building are preferable. The panels may be supported by specially designed materials or by standard materials used in the market for the support of glazing.

Many construction firms may produce PVs by order in specific dimensions or even in various geometrical shapes. For applications of PV panels integrated on buildings panels of various colours and varying transparency levels are available (often at the expense of reduced efficiency). Additionally, manufacturers offer special products, such as PV panels that may replace roof tiles or other conventional materials used for covering roofs.

A benefit for installing photovoltaics in buildings is the use of the PVs as building elements that replace other materials used on the exterior surface of buildings, and which have often high cost (as in the case of façade coverage). The savings produced by this cost reduction, makes the use of PV systems more economically viable.

GUIDE FOR ENERGY RETROFITTING OF SOCIAL HOUSING

Part II

Technical Solutions for Energy Retrofitting of the Building Envelope

Developed by CENER (Diego Martinez Saenz and Inés Díaz Regodón)

cener
centro nacional de energías renovables
FUNDACIÓN CENER CIEMAT

PART II: Table of Contents

1 CONSTRUCTION CHARACTERISTICS OF SOCIAL HOUSES II.2

2 ENERGY EFFICIENCY MEASURES II.2

2.1 IMPROVING ENERGY EFFICIENCY DURING REPAIR AND IMPROVEMENT WORK ..... II. 3
2.2 INSULATION II.4
2.3 WINDOWS AND DOORS II.14
2.4 DRAUGHT-STRIPPING II.15

3 CASE STUDIES II.17

3.1 BUILDING TYPES II.17
3.2 RENOVATION II.20
3.3 ENERGY PERFORMANCE CALCULATIONS II.23

1 Construction characteristics of social houses

Social housing dwellings may exhibit any of the following characteristics:

- Poor thermal performances compared with current regulations
- Out of date and inefficient heating systems, with no control in individual dwellings
- Condensation and mould growth
- Poor roof insulation
- Concrete or brick spralling.
- Single glazed windows with warped sashes and no draught stripping.
- Balconies and access galleries frequently form thermal bridges, with continuous floors and/or walls from inside the dwelling to outside.
- Excessive heat loss through very large windows giving onto balconies

2 Energy efficiency measures

Brief descriptions of energy saving measures for the various parts of a building are given below. A full package of energy saving measures will produce the optimum result.

The costs of each measure vary considerably because of differences in the height, complexity and ease of access of different buildings. The indicative costs given here are for guide purposes only; actual costs could be higher or lower.

Savings quoted are the estimated annual percentage savings of space and water heating energy. The figures are based on an average two bedroom flat, currently with no wall insulation but with standard levels of roof insulation.

Use this table to establish the general range of cost-effectiveness for different improvement measures.

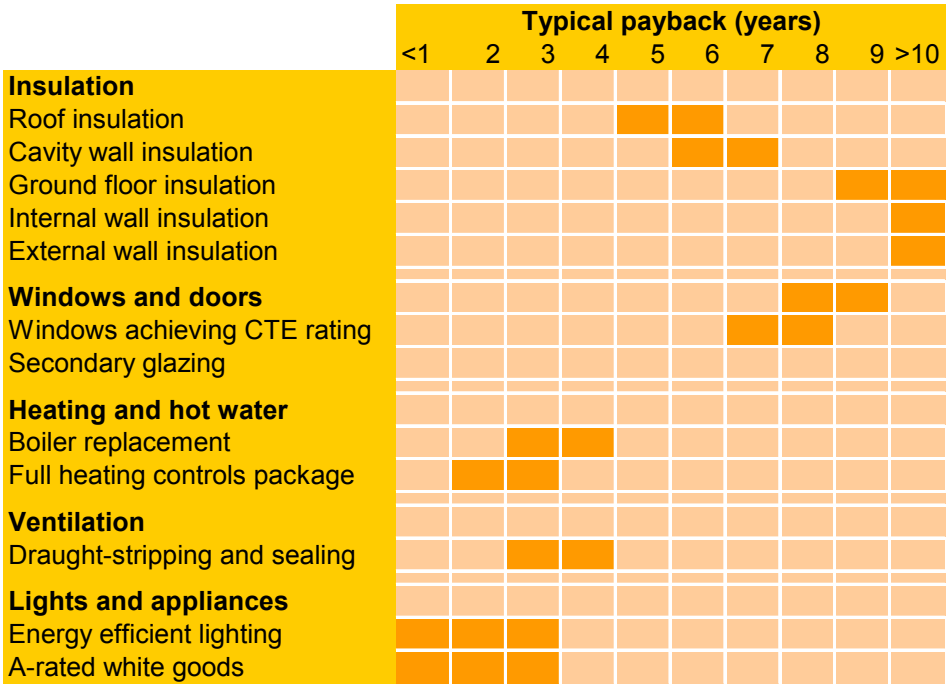

Notes:

The cost and savings figures will vary according to the size of the dwelling, its location, the measures (if appropiate), fuel, heating system and the materials used.

Energy savings are estimated from a range of standard house types with gas central heating and standard occupancy. Actual savings depend on individual circumstances. Remember that some of the benefit may be taken in improved comfort.

2.1 Improving energy efficiency during repair and improvement work

The energy efficiency of a dwelling can be improved without waiting for a full refurbishment package to be undertaken. Repair and improvement programmes provide many opportunities for incorporating individual energy efficiency measures, as illustrated below.

It is invariably cheaper to combine energy efficiency measures with repair and improvement work, rather than return in a few years time and install them separately.

However, insulation and draughtstripping should ideally be upgraded before boilers and heating systems are replaced. This allows the heating plant to be matched to the reduced demand, which means cutting capital costs and improving efficiency. A new central heating system in an uninsulated flat may produce greater comfort, but the additional fuel costs may be beyond the tenant's ability to pay.

Wherever possible, a complete package of energy measures should be installed, as partial upgrading can lead to problems elsewhere (for example, installing well-sealed, double-glazed windows can result in condensation on cold bedroom walls in the absence of other measures). The table below shows several upgrading measures:

General improvements	Potential for energy upgrading
Rewiring	Internal wall insulation.
Refitting kitchens and bathrooms	Internal wall insulation. Double glazing. Ventilation.
Repairing spalling concrete	External insulation.
Upgrading external enviroment	External insulation.
Repairing windows	Draughtstripping.
Replacing windows	New high efficiency windows Reduce glazed area.
Repairing heating system	Higher efficiency system. Smaller systems for insulated dwellings
Repairing cladding	External insulation.
Repairing flat roof	Add insulation.
Repairing doors to balconies	Insulate doors.

Opportunities for including energy efficiency into repair and improvement work

2.2 Insulation

The first measure which can be applied in order to improve the hygrothermal performance of the building, is increasing its insulation. In this way the thermal transmittance will be reduced, excessive heat losses will be avoided and the majority of condensation problems can be solved.

2.2.1. Walls

Walls can be insulated externally, internally (inside the building) or, when present, by filling the cavity between two layers of bricks.

External insulation systems typically consist of an insulation layer connected to the existing wall and covered with a protective render or cladding.

Internal insulation systems usually include: a laminated insulating plasterboard; a directly applied insulation board plus plasterboard; or an internal studwork structure with insulation set between the studs plus plasterboard.

In the case of cavity wall insulation the insulation is injected directly into the existing wall cavity.

The last two options can be applied by individual house owners, whereas the last option needs to be applied on the whole external façade, affecting all dwellings in the building.

2.2.1.1 External insulation

Unless the building is already rendered, external insulation will radically change its appearance. There are many render systems available.

The application of external insulation material has several big advantages:

- It is easy to install and can be applied without disturbing the inhabitants of the building.
- It reduces thermal bridging and minimises condensation and heat loss.

- The continuity of the thermal insulation avoids large temperature differences between the different constructive elements throughout the building and makes that overall temperature differences are small.
- As a consequence of the previous point the movement due to dilatation and contraction of the building will be less. This will also reduce the presence of cracks, which produce undesired (hygrothermal) effects of degradation.
- The walls will have a larger thermal mass, making it a suitable application for dwellings which are being heated all day.
- It reduces thermal shocks: it avoids abrupt temperature variations in the walls (day-night)
- Large amounts of insulation can be used without reducing living space.
- It renews aging façades and increases the life expectancy of the building.
- Helps to alleviate problems such as internal damp or water ingress.

Refurbishment of exterior façade in social housing. Source: JACAR

Insulation should be turned into window reveals to prevent condensation on the cold, uninsulated surfaces. However, window frame thickness may sometimes necessitate a reduced insulation depth. Insulation must not be allowed to block window trickle vents. The choice of finish may affect future maintenance requirements. A 'pebbledash' finish should need less maintenance than painted render. Light colours that reflect the heat are less likely to suffer from cracking. Some renders may be more easily damaged than a brick wall.

A disadvantage of applying exterior insulation is the higher cost, due to the need for scaffolding when applying the exterior insulation system.

There are two different systems for external insulation:

- Without cavity: On the existing façade the thermal insulation is applied, directly attached to the external rendering.
- With (ventilated) cavity: On the existing façade, insulation material and some covering is applied, leaving a ventilated air gap between the insulation material and the covering.

Without cavity

On the exterior façade a thermal insulation material and an additional render is placed, in the form of a prefab panel or individual layers. These kinds of systems are more commonly used than systems with a cavity, basically because of the lower cost and the easier way of applying. However, the cavity does have a better energetic performance.

Prefab insulation placing. Source: JACAR

Some examples of systems without cavity with their different types of cladding are:

With continuous mortar cladding

This system consists of the following materials:

- An adhesive, in order to connect the insulating material to the existing façade.
- The insulation material, usually extruded or expanded polystyrene.
- The cladding, applied in various layers, serving as exterior render of the insulation material, containing a reinforcement mesh.
- The render topcoat can be a plane or textured coloured rendering or a silicate or plastic paint. This is the layer which gives permeability to the façade.

It is pointed out that the walls renovated with this system are continuous and homogenous.

PVC panels

Prefab system, which consists of an extruded PVC panel, equipped with edges which allow compression connection during assembly and connection to the wall. Below it is a moulded insulation panel of expanded polystyrene.

GRC Panels

Consists of modular elements which are made of a plate of GRC (Glassfibre Reinforced Concrete), with a minimum thickness of 6mm), expanded polystyrene insulation material and coated aluminium profiles.

Aluminium panels

Aluminium panels fabricated with polystyrene insulation inside, with some circular openings on its exterior side, through which air can circulate, leaving a small ventilated air chamber, which is needed for this type of cladding.

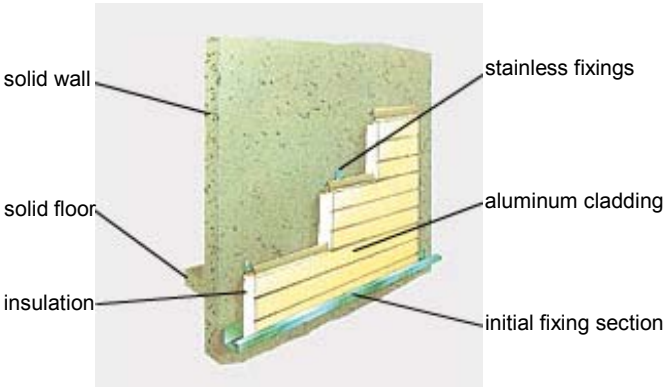

Aluminium panels. Source: JACAR

Panels with mortar cladding

Prefab panel composed of expanded polystyrene insulation material and a mortar/cement based cladding enhanced with polymers embedded with marble or coloured quartz. The assembly consists of mechanical connections and of horizontal and vertical connectors of the components throughout the insulation material.

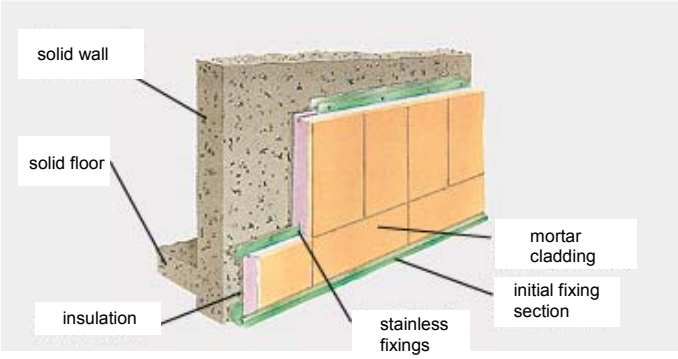

Panels with mortar cladding. Source: JACAR

With ventilated cavity

On the existing façade a thermal insulating material is being placed, followed by an air gap and a covering material with open joints and attached to a light substructure or attached to structural elements of the building.

The advantages of this system in respect to those without cavity are based on the protection of the insulating material against water infiltration. In this way the insulation layer maintains its integrity.

In addition to that, the cavity provides a very important thermal protection in summer: A part of the incident solar radiation is reflected by the external cladding, another part will pass on to the ventilated cavity, where the heat will be evacuated outwards by convection and a part will be transmitted towards the interior of the building, depending on the condition of the insulating material and of the existing wall.

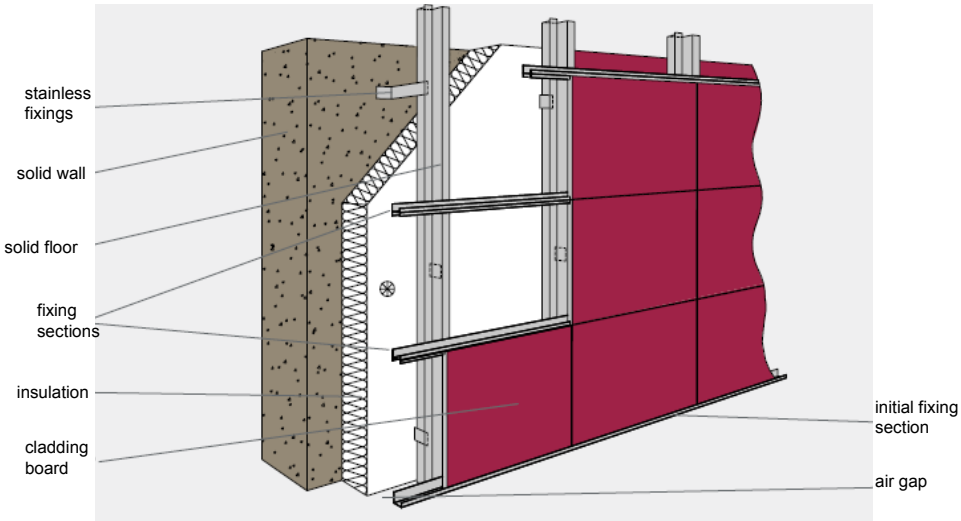

With ventilated cavity. Source: JACAR

2.2.1.2 Internal insulation

With internal insulation, the thermal performance can be improved without altering the external appearance of the building. It is also suitable for individual home application when there is no collective action of the dwelling's owners in a building. Some other advantages are: internal installation is easier to install and to maintain than external insulation; room surfaces warm up quickly (making

internal insulation very suitable for houses heated only in the morning and evening); no scaffolding needed. However, it will also result in a loss of internal floor area and the installation process may cause inconvenience to the inhabitants. It can also leave thermal bridges and skirting boards, as well as create the need to reposition door frames and electrical fittings.

Internal insulation placing

The replacement of the existing plaster layer presents an ideal opportunity to install internal insulation. The condition of the existing wall must be properly assessed – and any necessary remedial work must be carried out - before applying internal insulation**.** This technique should not be used when there is dampness.

Most common internal insulation is made of a plasterboard sheet laminated to an insulation board, or the insulation board may be separate. Insulation board with a built-in vapour control layer will stop moist internal air condensing on the cold brick behind the insulation.

Continuous ribbons of plaster adhesive at the wall perimeter and around all openings (such as sockets and plumbing) will prevent cold air behind the insulation leaking into the house. These adhesive ribbons should be sufficiently thick to create a small cavity between the internal wall surface and the insulation.

If the brickwork is uneven (perhaps after the removal of existing plaster), the wall should be rendered to provide an even surface before fixing the boards.

Internal studwork should be used where internal insulation has been specified for a wall that has previously suffered from damp. This allows the creation of a cavity between the internal wall surface and the insulation.

Studwork is also an effective solution where the wall is bowed or uneven and space is not at a premium. Systems are available using timber or steel. A damp-proof membrane should be placed between the timber and internal wall surface.

2.2.1.3 Cavity wall insulation

The walls with air gap are already superior to walls consisting of one single layer. However, their insulating capacity can still be increased by injecting an insulating material into the air gap. The insulating material can be a crushed glass fibre material pressed together with resin or can be polyurethane foam.

However, this system is not the ideal renovation solution. It doesn't solve the problem of heat losses through cold-bridges, because the connection between the wall and the rest of the building remains unchanged. Sometimes the gap is partially filled with forgotten objects, mortar residues, etc. which might produce condensation.

Insulation injection in the air gap

Before the insulation is installed a pre-installation inspection is undertaken to asses the wall's suitability. Any defects or dampness problems should be put right before work begins. If this is satisfactory, the installation process proceeds as follows:

- Injection holes are drilled through the mortar joints at 1m intervals.
- Cavity barriers are installed to prevent the fill entering the cavities of adjacent properties.
- The insulation is injected into the wall cavity
- Quality checks are carried out on the fill material prior to making good the injection holes.
- Injection holes are filled with colour-matched mortar or render.

The advantages of this process are: its low cost, it can be carried out easily and there is no need for exterior scaffoldings. As disadvantages can be mentioned: the loss of the benefits created by the air gap, possible damage of the inner wall caused by the injection pressure, and there is some difficulty when totally filling up the air gap when other elements, such as tubes, are present.

2.2.2 Ground floors

The position of the insulation in a ground floor influences the effects of thermal mass of a building. Positioning the insulation under chipboard or a screed will allow the building to heat up quickly because the insulation is close to the inside of the building. Insulation placed above the concrete slab will help the room to warm up quickly when the heating is switched on. The damp-proof membrane also needs to be above the concrete slab. Otherwise moisture from the drying concrete could affect the new floor finishes. Positioning the insulation below the slab increases the influence of thermal mass of the building. This results in more even temperatures and a reduced risk of condensation. This is best suited to buildings that are continuously heated or benefit from significant solar gains.

An exposed slab (not covered with carpets or rugs) will absorb heat on warm sunny days and limit overheating

As heat loss is greatest at the edges of a ground floor, its size and shape will affect its thermal performance.

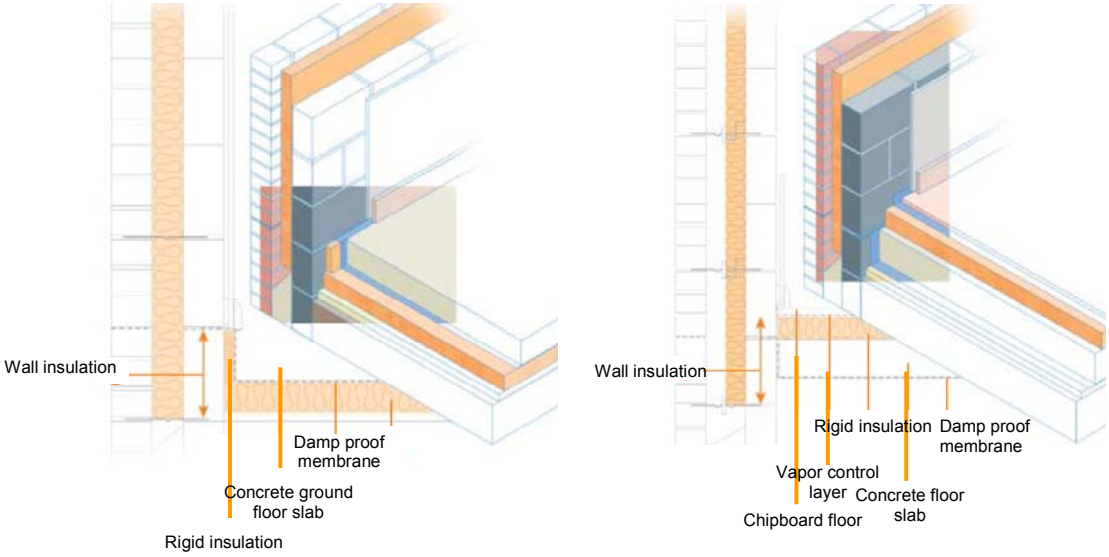

Ground floor insulation

If the existing concrete floor suffers from condensation, remedial works should be completed prior to any insulation works. The only simple way of insulating an existing concrete ground floor is to add insulation and then a new floor deck on top.

2.2.3 Roofs

The main types of roofs are:

- Pitched roofs
- Flat roofs

2.2.3.1 Pitched roofs

They are easy to insulate –either insulating between the joists, or at roof level in the rafters.

Insulating between joists

Mineral wool quilts are generally used for this purpose – the insulation being laid both in- between the joists and over the joists. Laying insulation over the joists has the additional effect of reducing the amount of heat which is conducted through the timber joists.

Insulating rafters

Although it can be done at any time, insulating at rafter level is most cost effective when converting a loft or when re-roofing.

Insulation can be fitted towards the inside or outside of the rafters. A number of proprietary systems are available. These use mineral wool and thermal boards.

All timbers should be inspected for damp, rot or infestation. Remedial works should be carried out prior to installing insulation. Appropriate ventilation must be provided when insulating the roof structure.

Provide a vapour control layer, on the warm side of the insulation to prevent moist air passing through. This should be joined to any vapour control layer in the adjacent walls.

2.2.3.2 Flat roof insulation

If the existing roof is flat then there are several options and opportunities for adding insulation. The water tightness of flat roofs has a limited lifespan, usually between 15-20 years.

The preferred method is to locate the insulation above the roof deck. The insulation should be placed below the weatherproof membrane in a warm roof deck construction, but above the weatherproof membrane in an inverted warm deck construction.

Warm deck features

- Suitable when the roof covering need to be replaced.
- The new weatherproof covering needs to be finished in white chippings or solar reflective paint to stop it overheating in the sun.
- A high-performance vapour control layer must be bonded or mechanically fixed to the deck with joints sealed in hot bitumen.
- Polyurethane, polystyrene and high mineral wool can be used.
- Careful detailing at the edge and parapet areas of flat roofs is important for high thermal performance and longevity.

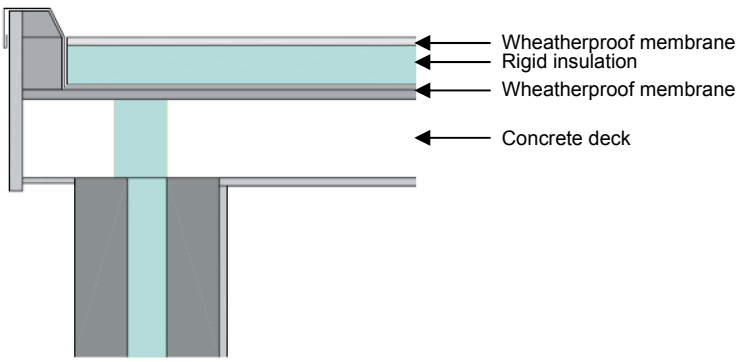

Flat roof construction

Inverted warm deck features

- Insulation needs to be weighted down with “ballast” to stop it being lifted by the wind.
- Ballast is normally paving slabs, pebbles or cement topping to the insulation.

- Extruded polystyrene and polyurethane are common insulation materials.
- The existing roof structure must be capable of supporting the extra weight, particularly of the ballast layer
- Rain water percolates through the ballast as well as joints in the insulation of inverted warm roofs. When this comes into contact with the waterproof membrane, there is increased heat loss.

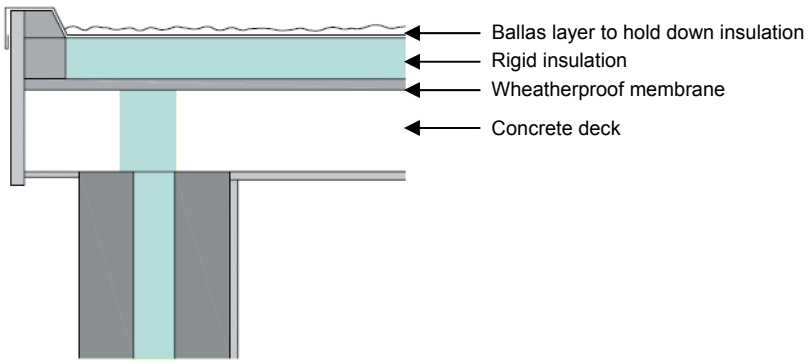

2.3 Windows and doors

A major source of energy loss is through windows and doors. Energy-efficient windows, when correctly selected and installed, will help to minimise the heating costs and will also increase comfort.

Although savings from installing new windows are not as high as other measures, it is important to recognise that windows are replaced very infrequently so another opportunity to install high-performance glazing may not arise for a number of years.

Secondary glazing is a good option where thermal performance needs to be improved and the existing character of the dwelling needs to be maintained. Secondary glazing should be draughtstripped, while the existing windows should be left without seals. This allows moisture in the cavity to be vented away to the outside. The selected system should be one that can be opened easily for ventilation. It should be possible to leave the secondary glazing slightly open and so allow a trickle of ventilation into the room.

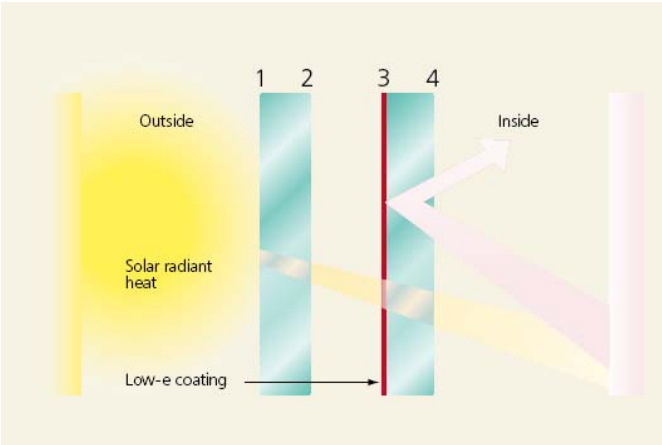

Typical features of high performance windows and doors include:

- Double or triple glazing. The number of panes and the width of the air gap influence the performance.
- Low e-coating. This is an special coating on the inside of the inner pane and it helps to reflect radiant heat back into the room. Make sure it is installed the right way round (usually indicated by a label).
- Gas filling. Instead of being filled with air, the gap between the panes can be filled with argon, krypton or xenon. This reduces the amount of heat that is conducted through the window.
- Insulated window frames. Heat loss occurs through the window frame as well as through the glass. An insulated frame further reduces heat loss and improves comfort.
- Draught-stripping. The use of compression seals reduces air leakage around the frame.

Replacement doors, whether unglazed or half glazed, should have insulated cores i.e. insulation between the two outer surfaces. Insulated doors have an insulating core of polyurethane sandwiched between an outer skin (various materials available).

Correct site installation includes sealing round window and door frames. Filling the gaps between the frame and the surrounding wall with expanding foam will improve the window's thermal performance and reduce draughts.

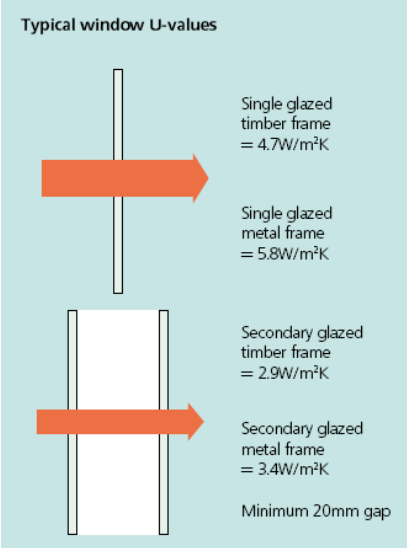

2.4 Draught-stripping

Draught–stripping of existing badly fitting windows and doors are all major sources of heat loss. It is inexpensive and simple to install and can greatly improve comfort as well as reducing heat loss, therefore fuel costs.

An accurate estimate of potential fuel savings due to the fitting of draught-stripping is difficult, but the benefits are quickly realised-mostly in terms of comfort. Some different kinds of seals are:

Compression seals

Compression seals are particularly well suited for external doors as the initial 3mm of the draught-stripping allows for seasonal movement of the door.

There is a wide variety of synthetic rubbers which offer good performance, some examples of compressions seals:

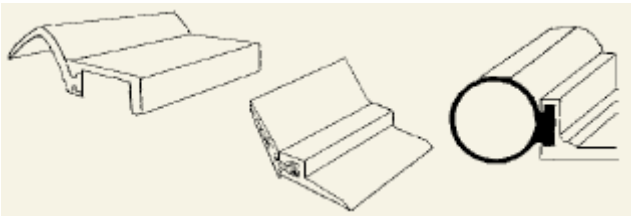

Low-friction or wiper seals

Suitable for most doors and window types. Wiper seals are generally made of nylon brush pile; are self-adhesive; and available in a variety of pile heights for

different gaps. They are especially good on sliding windows and doors, but need special care when repainting. An example of low-friction or wiper seals:

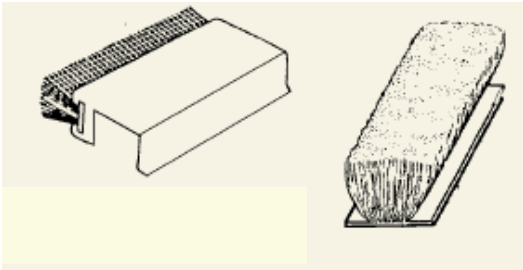

Gun-applied sealants and fillers

Larger gaps, including those at the heads of windows, can be filled using silicone or polyurethane sealants which, when correctly applied, expand, set and harden to permanently fill the gap.

Face-fixed seals usually have two parts; a seal which moves against the door or window to close the gap, and a carrier (often made of rigid plastic or aluminium) which holds the seal firmly in place and is itself fixed to the frame. These draughtstrips can easily cope with the varying gaps around warped doors, simply by adjusting the position of the carrier. As the draughtstrip is exposed rather than hidden, its appearance will be one of the factors affecting selection. Similarly, hidden brushes or seals, which retract automatically upon opening, can be fitted into the bottom sections of wooden doors.

3 Case studies

In the following chapters two case studies of building renovation in Navarre are presented: one of a typical flat building built in the period between 1960- 1970 and one of a 4-storey building built in the period between 1940- 1950. Both of them are situated en Pamplona, the capital of the Navarre province.

	unit costs	typology 1 2176 m^2 8 floors 32 dwellings	typology 2 1312 m^2 4 floors 16 dwellings
Renovation of the building shell			
Addition of insulation (usually external insulation) on walls and roofs	80 €/m2	230000	109000
Replacement of windows - double or triple glazing on insulating frames	250 €/m2	190000	67000
Renovation of heating/cooling systems			
Replacement of boiler		12000-15000	7000-9000
Insulation of pipes	7-9 €/m	420-540	280-360
Installation of temperature controls Room thermostats Outside weather compensation or Thermostatic Regulating Valves	60 €/unit 45 €/unit	6000-8000	3000-4000
Installation of passive/hybrid cooling devices			
External shading systems	200€/m2	210000	53600
Ceiling fans	90 €/fan	5760	2880
Lights and appliances			
Energy efficient lighting	10 €/unit	3200	1600
Solar thermal systems for domestic hot water and space heating			
Thermosyphoning DHW systems	700-800 €/m2	56000-64000	23000-32000
Central solar systems	500-600 €/m2	40000-48000	20000-24000
Large central solar systems	400-500 €/m2	32000-40000	16000-2000

3.1 Building types

Building type 1, Calle Azoz

The building is an H-shaped flat building, consisting of a ground floor (storage places) and 8 floors with 4 dwellings on each floor.

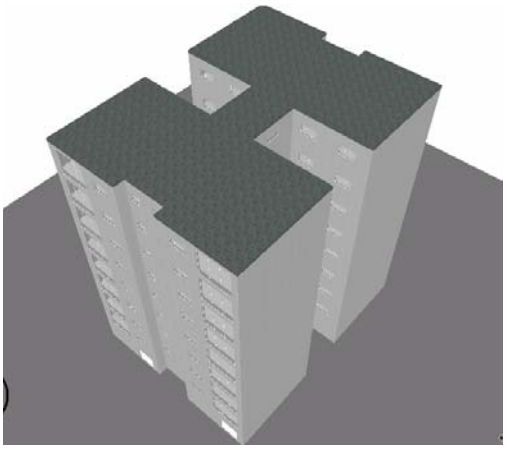

(a) (b)

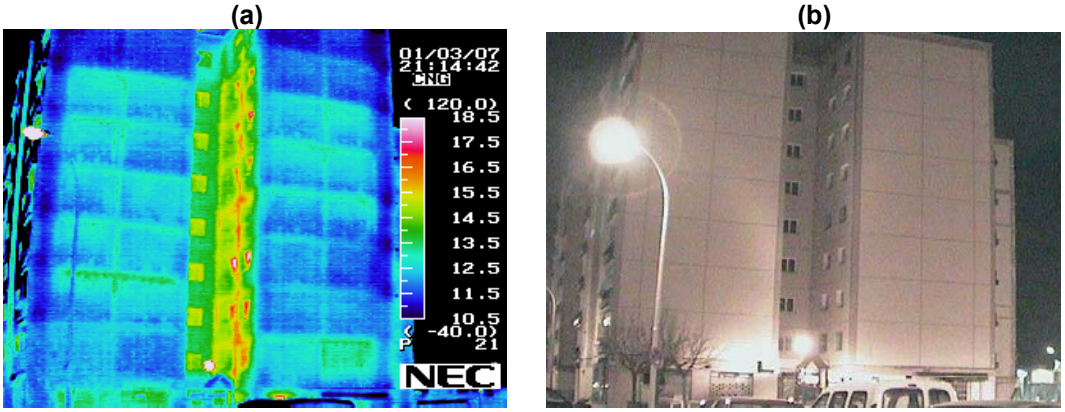

(c) (d)

Social Housing Type 1, calle Azoz, Pamplona

a,b) Model in Energy+ ; c) thermographic photo ; d) photo by night

The building has the following characteristics:

	Description	U-value [W/m2K]*	R-value [m2K/W]**
Walls	Non-insulated concrete wall (0,2m)	2.6	0.21
Windows	Wooden frame Single glass (4 mm)	6.2	-
Roof	Top layer Thin insulating layer Concrete layer (0,2m)	2.1	0.34
Groundfloor	Non-insulated cast concrete floor (0,2m)	2.6	0.18

Table 3.1 – Characteristics of building type 1 (calle Azoz), before the renovation)

*** Overall U-value**

**** R-value of the layer itself**

There is no mechanical ventilation in this building and the heating to the dwellings is supplied by a central heating system. The boiler is said to have an efficiency of 88%

The measured energy use of this building for heating (actual consumption by the boiler) is 105 kWh kWh/m^2 (9,97 m^3 gas/m^2, average *useful* surface). The average yearly consumption of dwellings in the province of Navarre is about 95 kWh/m^2.

(Source: Plan de Mejora Energética)

Building type 2, Chantrea

This is a linear 4-storey building with a pitched roof. Each floor consists of 4 dwellings.

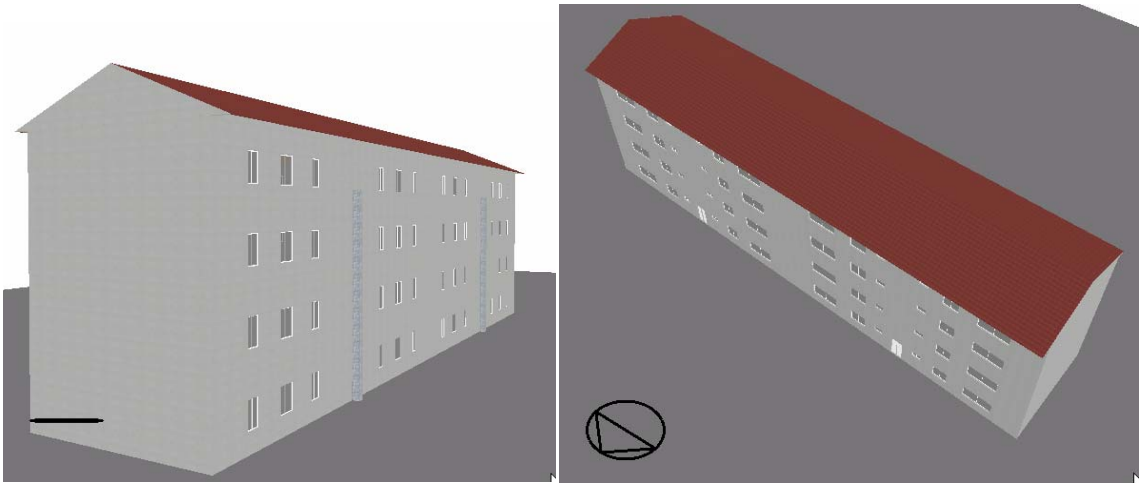

(a) **(b)**

Social Housing Type 1, calle Azoz, Pamplona

a,b) Model in Energy+

The building has the following characteristics:

	Description	U-value [W/m2K]*	R-value [m2K/W]**
Walls	Non-insulated solid brick wall (0,22m)	2	0.32
Windows	Wooden frame Single glass (4mm)	6.2	-
Pitched Roof	Rooftiles Airgap Felt Wooden structure	2	0.35
Groundfloor	Non-insulated cast concrete floor (0,2m)	2.6	0.18

Table 3.2 – Characteristics of building type 2 (Chantrea), before the renovation)

*** Overall U-value**

**** R-value of the layer itself (excluding surface convection resistance)**

There is no mechanical ventilation in this building and the heating to the dwellings is supplied by a central heating system. The boilers efficiency is assumed to be 88%.

The measured energy use of this building for heating (actual consumption by the boiler) is quite high: 184 kWh kWh/m^2 (about 14 m^3 gas/m^2, average *useful* surface). The average yearly consumption of dwellings in the province of Navarre is about 95 kWh/m^2.

(Source:Plan de Mejora Energética)

3.2 Renovation

For the renovation of these two buildings the following measures are proposed:

- Insulation of the exterior walls by means of an additional wall construction on the outside of the building, consisting of insulating material, an air gap and a covering concrete board layer. Schematically:

- Applying insulating windows (double glass), with an U-value below 2,5 W/m^{2}K. Applying this measure will include the replacement of the existing frames. When doing so, attention should be paid to the air-tightness. The window frames should be placed in the wall using a proper type of sealing in order to reduce infiltration losses.
- Insulating the ground floor (U-value <0.38 W/m^{2}K)
- Insulating the roof (U-value < 0.52 W/m^{2}K)

The proposed U-values are based on the Spanish Building Code (CTE Codigo técnico de la Edificación). This building code imposes these

minimum values for new buildings and refurbishment. They depend on the geographical zone of Spain in which the renovation takes place. Pamplona is in zone D1, which has the following minimum demands on insulation:

Walls: 0.66

Floors 0.49

Roofs 0.38

g-value 0.36

Documento Básico HE Ahorro de Energía

ZONA CLIMÁTICA D1

Transmitancia límite de muros de fachada y cerramientos en contacto con el terreno	U_{Mlim}: 0,66 W/m^{2}K
Transmitancia límite de suelos	U_{Slim}: 0,49 W/m^{2}K
Transmitancia límite de cubiertas	U_{Clim}: 0,38 W/m^{2}K
Factor solar modificado límite de lucernarios	F_{Llim}: 0,36

Fragment of the Spanish Building Code CTE

The U-values mentioned are the overall U-values, including internal and external surface convection.

The following tables show the proposed renovation measures for the two building types and the consequences for the U-values:

Building type 1 – Calle Azoz	Before the renovation			After the renovation		
	Description	U-value* [W/m2K]	R-value** [m2K/W]	Description	U-value* [W/m2K]	R-value** [m2K/W]
Walls	Non-insulated concrete wall (0,2m)	2.6	0.2	Concrete board Airgap (1 cm) Glasswool (3 cm) Solid brick (0,22)	0.6	1.5
Windows	Wooden frame Single glass (4 mm)	6.2	-	Wooden frame Double Glass (4+12+4, Argon filled)	2.6	-
Flat Roof	Rooftiles Thin insulating layer Concrete layer (0,2m)	2.1	0.3	Rooftiles Airgap (1cm) Insulating material (3cm) Felt Wooden Structure	***0.52***	***1.8***
Groundfloor	Non-insulated cast concrete floor (0,2m)	2.6	0.2	Non-insulated cast concrete floor (0,2m) (unchanged)	2.6	0.2

Table 3.3 – Renovation for building type 1 (Calle Azoz)

*** Overall U-value**

**** R-value of the layer itself (excluding surface convection resistance)**

Building type 2 - Chantrea	Before the renovation			After the renovation		
	Description	U-value* [W/m2K]	R-value** [m2K/W]	Description	U-value* [W/m2K]	R-value** [m2K/W]
Walls	Non-insulated solid brick wall (0,22m)	2	0.3	Concrete board Air gap (1 cm) Glass wool (3 cm) Solid brick (0,22)	0.65	1.5
Windows	Wooden frame Single glass (4 mm)	6.2	-	Wooden frame Double Glass (4+12+4, Argon filled)	2.6	-
Pitched Roof	Roof tiles Air gap Felt Wooden structure	2	0.4	Roof tiles Air gap (1cm) Insulating material (3cm) Felt Wooden Structure	0.37	2.5
Groundfloor	Non-insulated cast concrete floor (0,2m)	2.8	0.2	Cover Glass wool (3 cm) Cast concrete floor (0,2 m)	0.38	1.9

Table 3.4 – Renovation for building type 2 (Chantrea)

*** Overall U-value**

**** R-value of the layer itself (excluding surface convection resistance)**

	unit costs	typology 1 2176 m^2 8 floors 32 dwellings	typology 2 1312 m^2 4 floors 16 dwellings
Renovation of the building shell			
Addition of insulation (usually external insulation) on walls and roofs	80 €/m2	230000	109000
Replacement of windows - double or triple glazing on insulating frames	250 €/m2	190000	67000
Renovation of heating/cooling systems			
Replacement of boiler		12000-15000	7000-9000
Insulation of pipes	7-9 €/m	420-540	280-360
Installation of temperature controls Room thermostats Outside weather compensation or Thermostatic Regulating Valves	60 €/unit 45 €/unit	6000-8000	3000-4000
Installation of passive/hybrid cooling devices			
External shading systems	200€/m2	210000	53600
Ceiling fans	90 €/fan	5760	2880
Lights and appliances			
Energy efficient lighting	10 €/unit	3200	1600
Solar thermal systems for domestic hot water and space heating			
Thermosyphoning DHW systems	700-800 €/m2	56000-64000	23000-32000
Central solar systems	500-600 €/m2	40000-48000	20000-24000
Large central solar systems	400-500 €/m2	32000-40000	16000-2000

Table 3.5 –Technological solutions for retrofitting

3.3 Energy performance calculations

The two buildings mentioned above have been modelled in the software DesignBuilder/Energy+. This software allows for (hourly) dynamic energy calculations of buildings. The following simulations have been carried out:

1. Calculation of the energy use before the renovation and a comparison with the real measured energy consumption.
2. Simulation of each of the renovation measures and the total renovation. The effectiveness of each measure and of the total renovation was studied.

The following table shows the results of the simulations before the renovation:

Building 1, Calle Azoz				
Boiler energy consumption in the simulation	429.069	kWh		
	197	**kWh/m2**	**710**	**MJ/m2**
	13.408	kWh/year/dwelling	48	GJ/year/dwelling
Measured energy consumption	**105**	**kWh/m2**		
Average energy conumption for heating in Navarra	94,5	kWh/m2		

Building 2, Chantrea				
Boiler energy consumption in the simulation	**171.082**	kWh		
	130	**kWh/m2**	**469**	**MJ/m2**
	10.693	kWh/año/vivienda	38	GJ/year/dwelling
Measured energy consumption	**184,4**	**kWh/m2**		
Average energy consumption for heating in Navarra	94,5	kWh/m2		

As can be seen, the calculated energy use of building 1 is rather high, even a lot higher than the actual measured energy consumption or the average in the Navarre province (which is an average of all kinds of dwellings in the province). The simulation of building 2 calculates an energy consumption lower than the actual measured consumption.

These simulations serve as a base for the simulations of the renovation measures. The difference between these two can be used to draw conclusions about the effectiveness of the proposed measures.

The following tables show the results of the simulations of the renovation measures:

Building 1 Calle Azoz	Energy Consumption kWh	Yearly Saving kWh	Yearly Saving %	Yearly Saving m3 natural gas	Yearly Saving €
Before the renovation	**429.069**				
Renovation only Roof	422.612	6.457	2%	607	20,20
Renovation only Glass	352.809	76.261	18%	7.173	238,56
Renovation only Walls	239.017	190.053	44%	17.876	594,52
Total renovation	**143.623**	**269.125**	**67%**	**26.848**	**892,93**

Table 3.5 – Simulation results for building type 1 (Calle Azoz)

Building 2 Chantrea	Energy Consumption kWh	Saving kWh	Saving %	Saving m3 natural gas	Saving €
Before the renovation	**171.082**				
Renovation only Roof	170.842	240	0%	23	0,75
Renovation only Glass	136.426	34.656	20%	3.26	108,41
Renovation only Walls	99.819	71.263	42%	6.703	222,93
Renovation only floor	171.077	5	0%	0	0,02
Total renovation	**66.295**	**104.787**	**61%**	**9.856**	**327,80**

Table 3.6 – Simulation results for building type 2 (Chantrea)

The tables show that for the two building types the biggest savings are realized by renovating the walls (about 43% of energy saving on heating) and by renovating the glass (including paying attention to sealing in order to reduce infiltrations, about 19% of energy saving on heating).

Renovating the roofs and floors in these simulations appear to contribute little, however it should be pointed out that: 1. by applying thicker insulation layers than the proposed minimum value, more significant savings can be realized and 2. The effectiveness of these measures depend greatly on the form of the building; in for example single homes with only two floors these measures will contribute in a far greater extent.

Payback times

The payback times for the total renovations of both buildings have been calculated. Assuming a total investment cost of €12.000 per home (source: Jacar, Pamplona) and taking into account the accounted yearly energy savings, a annual interest rate of x % and a supposed increase of annual fuel prices of y % the following curves for each building can be drawn:

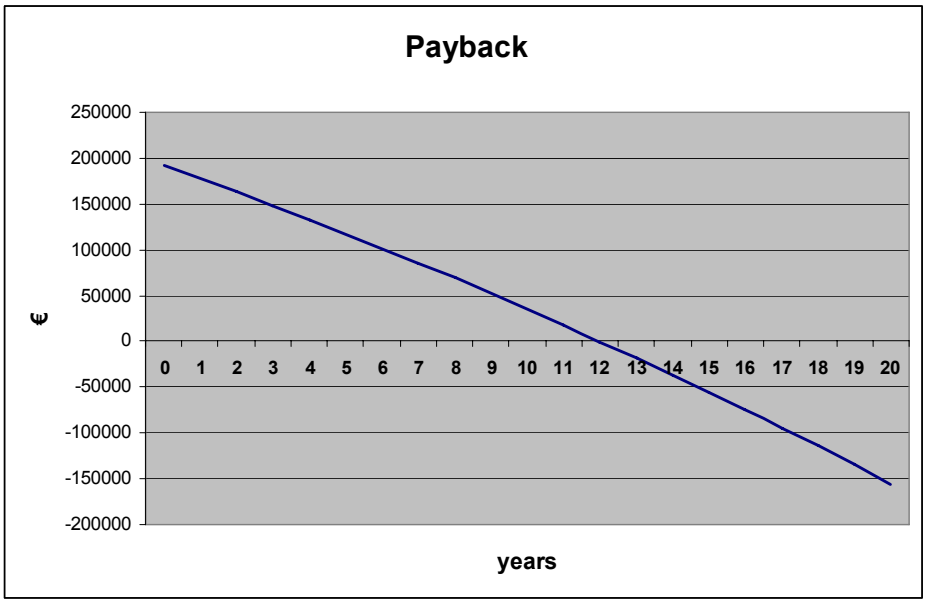

Fig. 3.1 Refurbishment measures payback Building 1

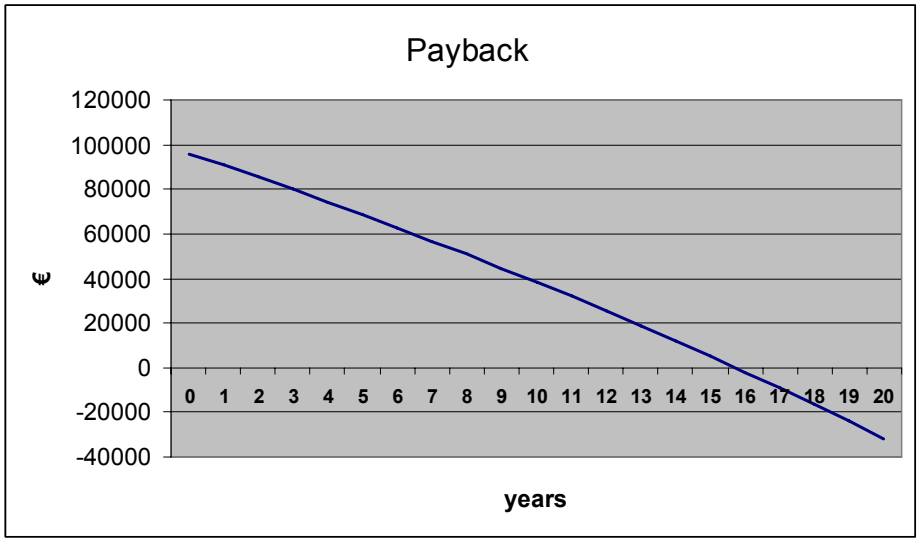

Fig. 3.2 Refurbishment measures payback Building 2

The calculated payback times for both buildings appear to lay between 11 and 15 years. With a minimum lifespan of 30 years for each measure it can be concluded that carrying out refurbishment in the north of Spain is likely to be economically feasible.

It should be pointed out that in the calculated renovation results, the minimum renovation measures proposed by the Spanish building code have been applied. Although reasonable percentages of energy savings for glass and walls are calculated, the application of thicker insulation layers and better types of glass and frames will yield higher savings and therefore also greater economical benefits, with lower payback times.

Also, the estimated cost of the renovation measures are highly variable and depend greatly on the form of the building, the chosen renovation measures and the cost calculated by the renovation company.